PANEL THICKNESS	GRIP MIN	GRIP MAX	SHORT REACH PART NUMBER	LONG REACH PART NUMBER
2 TO 12 [.075 TO .475]	23.5 [.93]*	35 [1.38]	M1-25-X1-58	M1-25-X1-88
	34 [1.34]	48 [1.89]	M1-25-X1-48	M1-25-X1-78
	47 [1.85]	61 [2.40]	M1-25-X1-38	M1-25-X1-68
	60 [2.36]	75 [2.95]	M1-25-X1-48	M1-25-X1-78
	74 [2.91]	88 [3.47]	M1-25-X1-58	M1-25-X1-88
12 TO 22.5 [.475 TO .885]	23.5 [.93]*	35 [1.38]	M1-25-X2-58	M1-25-X2-88
	34 [1.34]	48 [1.89]	M1-25-X2-48	M1-25-X2-78
	47 [1.85]	61 [2.40]	M1-25-X2-38	M1-25-X2-68
	60 [2.36]	75 [2.95]	M1-25-X2-48	M1-25-X2-78
	74 [2.91]	88 [3.47]	M1-25-X2-58	M1-25-X2-88
18.5 TO 29 [.73 TO 1.14]	22.5 [.89]*	35 [1.38]	M1-25-X3-58	M1-25-X3-88
	34 [1.34]	48 [1.89]	M1-25-X3-48	M1-25-X3-78
	47 [1.85]	61 [2.40]	M1-25-X3-38	M1-25-X3-68
	60 [2.36]	75 [2.95]	M1-25-X3-48	M1-25-X3-78
	74 [2.91]	88 [3.47]	M1-25-X3-58	M1-25-X3-88

* SEE NOTE 1

NOTES:

1. GRIPS UNDER 33.5 [1.32] (30 [1.18] FOR LONG PAWL) ARE AFFECTED BY PANEL THICKNESS. USE THE FOLLOWING CHART TO DETERMINE YOUR MINIMUM GRIP BY ADDING THE OFFSET VALUE TO YOUR PANEL THICKNESS.

PART NUMBER	OFFSET VALUE
M1-25-X1-58	21.5 [.85]
M1-25-X2-58	11.5 [.45]
M1-25-X3-58	4 [.12]
M1-25-X1-88	18 [.71]
M1-25-X2-88	8 [.32]
M1-25-X3-88	0.5 [.02]

2. FOR LONG PAWL ASSEMBLIES WHERE ONLY A 90° TURN IS DESIRED, A MINIMUM GRIP OF 22 CAN BE OBTAINED FOR ALL PANEL THICKNESSES.

3. X = 3 - NON LOCKING
   = 8 - LOCKING

4. USE A 17mm WRENCH ON EACH JAM NUT SIMULTANEOUSLY TO SECURE PAWL DURING ASSEMBLY TO AVOID TRANSMISSION OF TORQUE TO PINS/HANDLE.

MATERIAL AND FINISH:

ALL VERSIONS:

- HOUSING, HANDLE, AND MOUNTING BRACKETS: CF-8M STAINLESS STEEL (NOMINAL CAST EQUIVALENT OF 316 STAINLESS STEEL), ELECTROPOLISHED
- STUD AND JAM NUTS: 316 STAINLESS STEEL, PASSIVATED
- WEAR WASHER: NYLON, GRAY
- O-RINGS: BUNA-N, NATURAL
- PINS, PAWLS, SPRING AND SCREWS: 300 SERIES STAINLESS STEEL, PASSIVATED
- SLEEVE: ACETAL, BLACK
- GASKET: NEOPRENE, BLACK

LOCKING ONLY:

- LOCKPLUG: CF-8M STAINLESS STEEL
- RETAINER: 301 STAINLESS STEEL, PASSIVATED
- LOCKPLUG O-RING: BUNA-N, NATURAL
- KEYS: 300 SERIES STAINLESS STEEL

FRONT VIEWS

SCALE 1:1

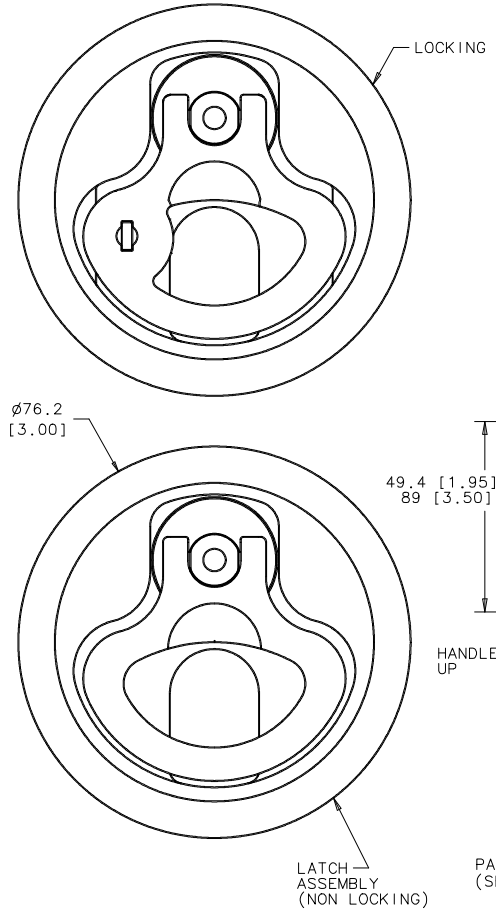

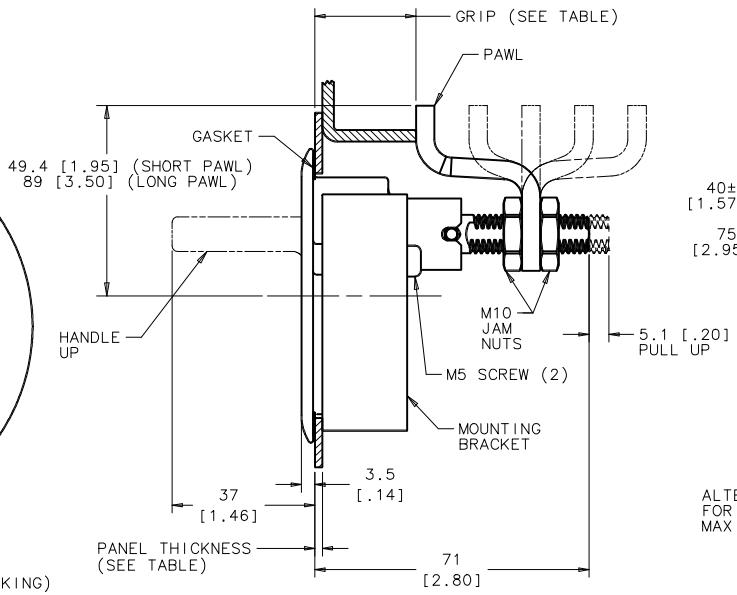

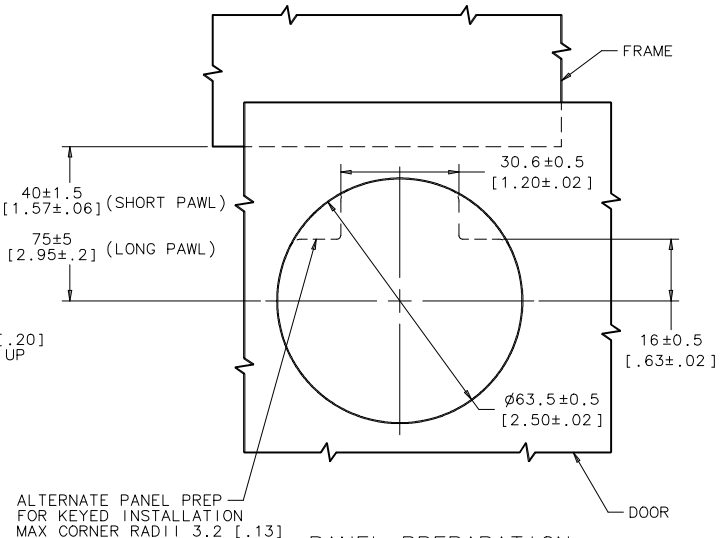

PANEL PREPARATION

REV	DATE	DRAWN/CHKD	DESCRIPTION
D	03NOV2004	JWJ/AJH	PRN: P2004-1277
E	21MAR2005	JWJ/VNI	PRN: P2005-0365
F	08DEC2005	AAB/MDY	PRN: P2005-1759
G	05MAR2024	GJL/SAK	PRN: P2024-0412

southco®

PROPRIETARY ITEM - EXCEPT FOR USES EXPRESSLY GRANTED IN WRITING, INFORMATION DISCLOSED HEREIN IS CONFIDENTIAL AND SUBJECT TO PATENT AND OTHERWISE ARE RESERVED BY SOUTHCO, INC.

M1 COMPRESSION LATCH ASSEMBLY

DRAWN	CHKD	SCALE	DATE
JWJ		0.75:1	15NOV2002

DRAWING NUMBER J-M1-25-3

ALL DIMENSIONS ARE IN MILLIMETERS [INCHES].

ALL DIMENSIONS WITHOUT TOLERANCES ARE FOR REFERENCE ONLY.

A3 PAPER SIZE

THIRD ANGLE PROJECTION